koleksiyon



Designed by
Studio Kairos

Archi

ARCHI BÜFE S0 BF180_1822

Archi has two types of sideboards, 180 and 240 cm. Top table, side body and drawer panels provide aesthetic and material diversity with lacquered paint or natural veneer alternatives. The inner body is made of melamine board to increase durability and provide practical use.

Warranty / Cleaning & Maintenance

The warranty period is five years from the date of delivery. Check the QR code below, to see cleaning & maintenance information.

Production Time / Assembly Notes

6-8 weeks + Shipping
The product is delivered disassembled.

Product Description

• The inner body is made of 18 mm melamine-faced particleboard.
• The drawers, doors, and outer body are made of lacquered MDF.
• The metal legs are powder-coated.
• The legs are fitted with protective plastic glides to help protect the floor.

Dimension

Volume	0 m3 0 cbft3
Package	0
Weight	0 kg 0 lbs

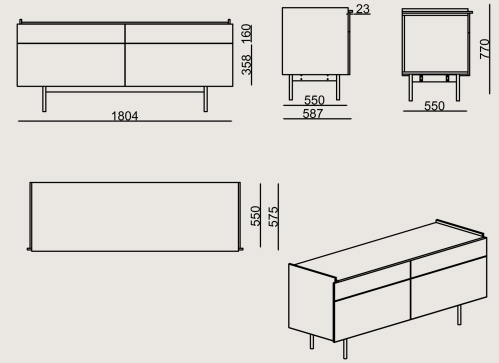

ARCHI SIDE BOARD S0 BF180_1822 VENEER
Overall Width: 1804 mm / 71.02”
Overall Depth: 575 mm / 22.64”
Overall Height: 770 mm / 30.31”

COLORS & MATERIALS

Veneer Finishes



18.22 XILO PLANKED
SAND FINISH

Metal Finishes



METALLIC BROWN
POWDER COATING



METALLIC
ANTHRACITE
POWDER COATING

Scan for all
colors & materials & catalogs