koleksiyon



Designed by
**Faruk Malhan**

# Babil

**BABIL S2 SBB4C_GN**

The door glass is framed with thin wooden slats, creating a grid structure that defines the design language. The balance of warm wood and contrasting glass adds character to any space.

## Warranty / Cleaning & Maintenance

The warranty period is five years from the date of delivery. Check the QR code below, to see cleaning & maintenance information.

## Production Time / Assembly Notes

6-8 weeks + Shipping
The product is delivered disassembled.

## Product Description

- The sideboard body is made of 16 mm MDF with a Dark Brown lacquer finish.
- Each compartment includes a drawer and a 25 mm MDF shelf with a lacquered finish.
- The aluminum-framed door profiles are available with either an anodized finish or a natural veneer finish.
- The doors are fitted with smoked or bronze-colored glass.
- The top is finished with natural veneer and a natural varnish.
- The legs feature a black nickel-plated finish.
- Plastic glides are fitted to the bottom of the legs.

## Dimension

| | |
|---|---|
| Volume | 0.99 m3<br>34.96 cbft3 |
| Package | 5 |
| Weight | 157 kg<br>346.13 lbs |

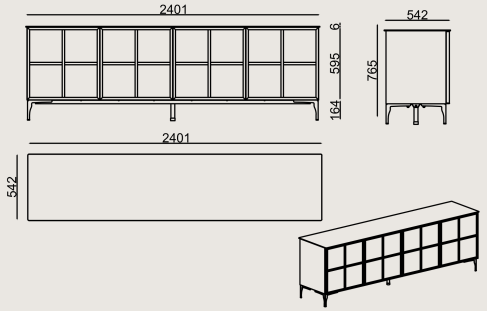


BABIL S2 SBB4C_GN GLASS NK
**Overall Width:** 2400 mm / 94.49”
**Overall Depth:** 540 mm / 21.26”
**Overall Height:** 770 mm / 30.31”

## COLORS & MATERIALS

### Glass Finishes

FÜME CAM

BRONZ CAM

BLACK MATTE LACQUER GLASS

RAL 9010 MATTE WHITE LACQUER

### Metal Finishes

Black Nickel Finish

### Lacquered Finishes

RAL 8019 DARK BROWN LACQUER

Scan for all
colors & materials & catalogs