koleksiyon



Designed by
Tristan Lohner

Line

LINE S0 N 252 SL PR SF

Line is a creation of French designer Tristan Lohner. The sofa features seat and backrest modules arranged on a sleek platform elevated by slender legs. In some configurations, the platform extends beyond the seating area, creating a practical surface for accessories or magazines.

Warranty / Cleaning & Maintenance

The warranty period is five years from the date of delivery. Check the QR code below, to see cleaning & maintenance information.

Production Time / Assembly Notes

6-8 weeks + Shipping
The product is delivered assembled.

Product Description

• The seat features a steel inner frame, while the armrests feature a wooden inner structure.
• The body is upholstered with foams of varying densities.
• A chipboard panel is positioned between the frame and the legs, serving as a connecting element.
• A black plastic electrical unit featuring 2 power outlets and 2 USB Type-A ports with a 220V connection is integrated into the coffee table.
• The legs are powder-coated metal.
• Protective furniture glides are attached to the bottom of the legs to protect the floor.

Dimension

Volume	0.99 m3 34.96 cbft3
Package	1
Weight	100 kg 220.46 lbs

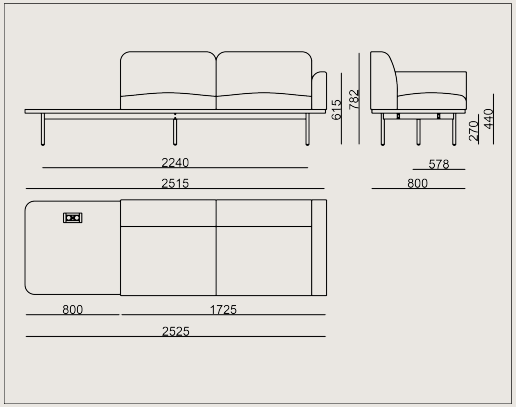

LINE S0 N 252 SL PR SOFA FABRIC A
Overall Width: 2525 mm / 99.41”
Overall Depth: 800 mm / 31.5”
Overall Height: 782 mm / 30.79”
Seat Width: 1600 mm / 62.99”
Seat Depth: 578 mm / 22.76”
Seat Height: 440 mm / 17.32”
Arm Height: 615 mm / 24.21”
For COL: Customer’s Own Leather
1150 dm2 / 123.78 sq.ft of leather required.

COLORS & MATERIALS

Metal Finishes

RAL7044 POWDER COATING
SATIN POWDER COATING
3101 WHITE POWDER COATING
METALLIC BROWN POWDER COATING
METALLIC ANTHRACITE POWDER COATING
SANDY GREY POWDER COATING

Laminate Finishes

3101 WHITE
VT459 GREY
A610 CABANA VNR
A662 REMBRANDT ART
D264 BONY DÜZ
D218 KASMIR NTR

Fabric Finishes

H Fabric: KUMAS KVADRAT CODA 2
A Fabric: FK028, KUMAS FIDIVI RADIO
B Fabric: Era, Valor, Jet, Alba, Tanriverdi, Porto, KUMAS CAMIRA UPLAND, KUMAS GABRIEL TONAL
B+ Fabric: Jeans, Catch, Kvadrat Autumn, Kvadrat Guest, Kvadrat Telemia, KUMAS GABRIEL CYBER
C Fabric: Rivet, Furnilana, Torino, Taiga, Forte, Thor, KUMAS FIDIVI CLASS, KUMAS GABRIEL GRAIN
D Fabric: Synergy, Main Line Flax, Iseo, Avatar, Jupiter, Kvadrat Technicolour, KUMAS FIDIVI NABUCCO
E Fabric: Oceanic, Matera, Velvety, Onix, Supernova, Smilla, Ipanema
F Fabric: Memory 2, Steelcut Trio, Craggan, Credo, Twin

Leather Finishes

B Leather: DERI MASTROTTO LINEA 622 NERO, Linea, Atlantic
Artificial Leather: Artificial Leathers
A Artificial Leather: Artificial Leathers A
B Artificial Leather: Artificial Leathers B
Vita Artificial Leather: Vita Artificial Leathers

Scan for all
colors & materials & catalogs