:koleksiyon



Designed by
Studio Kairos

Calvino

CALVINO S6 C0814L

Designed by Studio Kairos, Calvino is a functional desk system created for open-plan offices and individual workspaces. Its modular structure, integrated cable management solutions, and practical shelving options support an organized and efficient work environment while maintaining a clean and contemporary aesthetic.

Warranty / Cleaning & Maintenance

The warranty period is five years from the date of delivery. Check the QR code below, to see cleaning & maintenance information.

Production Time / Assembly Notes

6-8 weeks + Shipping
The product is delivered disassembled.

Product Description

• Single-user workstation.
• The workstation includes a storage unit with two drawers and a system unit compartment that provides power access to the desktop through a circular opening in the bottom tray.
• The top drawer is lockable, and the product is supplied with two keys.
• The workstation includes one powder-coated sheet metal cable grommet and an under-desk cable management tray.
• The models in this series are compatible with both Koleksiyon Screen MPS and COPF Panel series.
• Please refer to the Koleksiyon Screen specification sheet for additional information.

Dimension

Volume	0.53 m3 18.72 cbft3
Package	3
Weight	0 kg 0 lbs

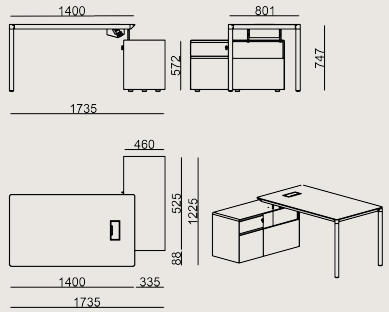

CLV S6 C0814L LAMINATE EPXY
Overall Width: 1400 mm / 55.12”
Overall Depth: 800 mm / 31.5”
Overall Height: 740 mm / 29.13”

COLORS & MATERIALS

Metal Finishes

RAL7044 POWDER COATING
SATIN POWDER COATING
3101 WHITE POWDER COATING
METALLIC BROWN POWDER COATING
METALLIC ANTHRACITE POWDER COATING
SANDY GREY POWDER COATING

Laminate Finishes

A610 CABANA VNR
A662 REMBRANDT ART
D264 BONY DÜZ
D218 KASMIR NTR
D142 GRANIT NTR
D164 LUNA NTR

Scan for all
colors & materials & catalogs