:koleksiyon



Designed by
Defne Koz / Marco Susani

Alcove

ALCOVE S0 N YSS RIGHT ARMC

With its rounded lines, Alcove is designed to soften the harsh and sharp edges often found in interiors, creating a more balanced and inviting atmosphere. Designed by Koz&Susani Design, Alcove offers ideal solutions for both living and working spaces.

Warranty / Cleaning & Maintenance

The warranty period is five years from the date of delivery. Check the QR code below, to see cleaning & maintenance information.

Production Time / Assembly Notes

6-8 weeks + Shipping
The product is delivered assembled.

Product Description

• The seat and back feature molded soft polyurethane over a metal frame.
• The high back features a quilted upholstery detail.
• The side table is made from 18 mm high-pressure compact laminate (HPL), providing resistance to heat and surface abrasion. It is securely attached to the seating unit with a powder-coated steel mounting bracket.
• The base is constructed from 18 mm MDF with a black lacquer finish.
• A powder-coated black steel flat bar is integrated beneath the base.
• Protective felt glides are fitted to the bottom of the legs to help protect floor surfaces.

Dimension

Volume	0.95 m3 33.55 cbft3
Package	1
Weight	38 kg 83.78 lbs

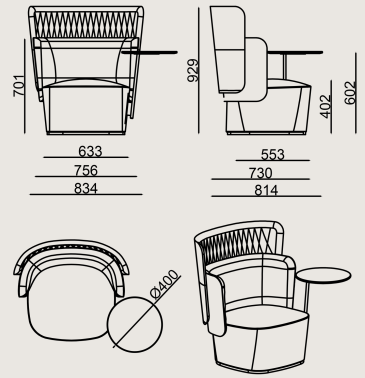

ALCOVE S0 N YSS RIGHT ARMC FBR A
Overall Width: 1076 mm / 42.36”
Overall Depth: 814 mm / 32.05”
Overall Height: 929 mm / 36.57”
Seat Width: 637 mm / 25.08”
Seat Depth: 553 mm / 21.77”
Seat Height: 403 mm / 15.87”
Arm Height: 200 mm / 7.87”

COLORS & MATERIALS

Metal Finishes


METALLIC BROWN POWDER COATING


METALLIC ANTHRACITE POWDER COATING

Lacquered Finishes


RAL 7006K BROWN LACQUER


RAL 3007 BURGUNDY LACQUER


VRN 2191 DARK BEIGE LACQUER


VRN 2192 GREY LACQUER


VRN 2021 GREEN LACQUER


RAL 7021 ANTHRACITE LACQUER

Fabric Finishes

A Fabric: İstanbul, KUMAS FIDIVI RADIO
B Fabric: Era, Jet, Alba, Vanelli, KUMAS GABRIEL TONAL
B+ Fabric: Jeans, Catch, KUMAS CAMIRA REPLAY ZERO, KUMAS GABRIEL CYBER
C Fabric: Antares, Furnilana, Torino, Taiga
D Fabric: Synergy, Main Line Flax, Iseo, Avatar, Jupiter
E Fabric: Matera, Supernova, Smilla, Ipanema, PERSAN_LAGOS_KOMBN, PERSAN_LAGOS_PLAIN
F Fabric: Steelcut Trio, Craggan
H Fabric: KUMAS KVADRAT CODA 2

Leather Finishes

Artificial Leather: Artificial Leathers
A Artificial Leather: Artificial Leathers A
Vita Artificial Leather: Vita Artificial Leathers
B Artificial Leather: Artificial Leathers B

Scan for all
colors & materials & catalogs