koleksiyon



Designed by
Defne Koz / Marco Susani

Alcove

ALCOVE S0 N KSS RIGHT ARMC

With its rounded lines, Alcove is designed to soften the harsh and sharp edges often found in interiors, creating a more balanced and inviting atmosphere. Designed by Koz&Susani Design, Alcove offers ideal solutions for both living and working spaces.

Warranty / Cleaning & Maintenance

The warranty period is five years from the date of delivery. Check the QR code below, to see cleaning & maintenance information.

Production Time / Assembly Notes

6-8 weeks + Shipping
The product is delivered assembled.

Product Description

• The seat and back feature molded soft polyurethane over a metal frame.
• The base is constructed from 18 mm MDF with a black lacquer finish.
• A powder-coated black steel flat bar is integrated beneath the base.
• Protective felt glides are fitted to the bottom of the legs to help protect floor surfaces.

Dimension

Volume	0.66 m3 23.31 cbft3
Package	1
Weight	34 kg 74.96 lbs

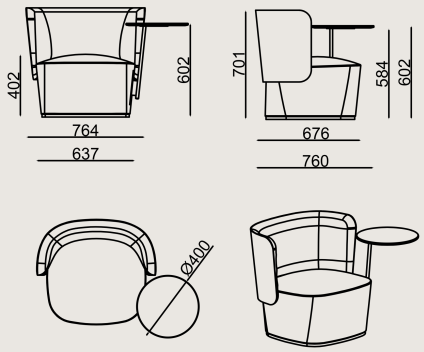

ALCOVE S0 N KSS RIGHT ARMC FBR A
Overall Width: 1042 mm / 41.02”
Overall Depth: 760 mm / 29.92”
Overall Height: 701 mm / 27.6”
Seat Width: 637 mm / 25.08”
Seat Depth: 553 mm / 21.77”
Seat Height: 403 mm / 15.87”
Arm Height: 200 mm / 7.87”

COLORS & MATERIALS

Metal Finishes

METALLIC BROWN POWDER COATING

METALLIC ANTHRACITE POWDER COATING

Lacquered Finishes

RAL 7006K BROWN LACQUER

RAL 3007 BURGUNDY LACQUER

VRN 2191 DARK BEIGE LACQUER

VRN 2192 GREY LACQUER

VRN 2021 GREEN LACQUER

RAL 7021 ANTHRACITE LACQUER

Fabric Finishes

A Fabric: İstanbul, KUMAS FIDIVI RADIO
B Fabric: Era, Jet, Alba, Vanelli, KUMAS GABRIEL TONAL
B+ Fabric: Jeans, Catch, KUMAS CAMIRA REPLAY ZERO, KUMAS GABRIEL CYBER
C Fabric: Antares, Furnilana, Torino, Taiga
D Fabric: Synergy, Main Line Flax, Iseo, Avatar, Jupiter
E Fabric: Matera, Supernova, Smilla, Ipanema, PERSAN_LAGOS_KOMBN, PERSAN_LAGOS_PLAIN
F Fabric: Steelcut Trio, Craggan
H Fabric: KUMAS KVADRAT CODA 2

Leather Finishes

Artificial Leather: Artificial Leathers
A Artificial Leather: Artificial Leathers A
Vita Artificial Leather: Vita Artificial Leathers
B Artificial Leather: Artificial Leathers B

Scan for all
colors & materials & catalogs