:koleksiyon



Designed by

Mono

OMNIA H.BACK BLACK OFF.CHAIR 1OMNAIACLN

Offering a complete product family with low and high back options, as well as visitor and meeting chairs, Mono stands out with its comfort and elegant presence in every workspace.

Warranty / Cleaning & Maintenance

The warranty period is five years from the date of delivery. Check the QR code below, to see cleaning & maintenance information.

Production Time / Assembly Notes

6-8 weeks + Shipping

The product is delivered assembled.

Product Description

• Polyamide and fiberglass reinforced structure with fire-retardant self-supporting mesh.
• Upholstered polyurethane seat.
• Height-adjustable 1D soft black padded armrests with black plastic frame.
• Height-adjustable black lumbar support.
• Black plastic gas lift and synchronized mechanism.
• Adjustable in height and depth.
• Swivel mechanism with black plastic five-star base.
• Braked black plastic casters for soft floors.*

*Casters suitable for hard floors must be ordered separately

Dimension

	Volume	0 m3 0 cbft3
	Package	0
	Weight	0 kg 0 lbs

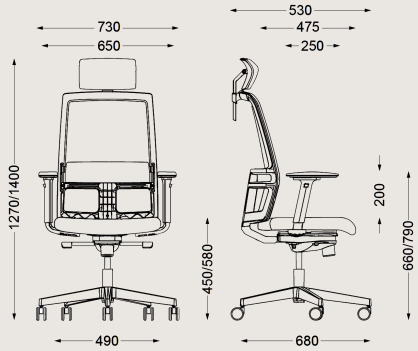

OMNIA H.BACK BLACK OFF.CHAIR 1OMNAIACLN
Overall Width: 800 mm / 31.5”
Overall Depth: 800 mm / 31.5”
Overall Height: 1150 mm / 45.28”

COLORS & MATERIALS

Scan for all
colors & materials & catalogs