:koleksiyon



Designed by
Koz Susani Design

Minipod

MINIPOD PRO S0 BASE

MİNİPOD is an award-winning design by Defne Koz & Marco Susani, honored with the Compasso d'Oro International Award. With its adjustable desk height, integrated wireless charging, and LED lighting, it offers a personalized work comfort. The entire system operates with a single plug.

Warranty / Cleaning & Maintenance

The warranty period is five years from the date of delivery. Check the QR code below, to see cleaning & maintenance information.

Production Time / Assembly Notes

6-8 weeks + Shipping
The product is delivered assembled.

Product Description

• The product body is made of a specially formed metal frame produced by polyurethane injection and upholstered with fabric.
• The height-adjustable tabletop is lacquer-painted on MDF.
• The tabletop includes a wireless charging unit and a concealed LED lighting system with adjustable brightness.
• A special textured braided cable is used in the product.
• One power module includes an outlet, USB, and Type-C ports.
• The lower base is powder-coated steel.
• The entire system operates with a single plug.

Product Details

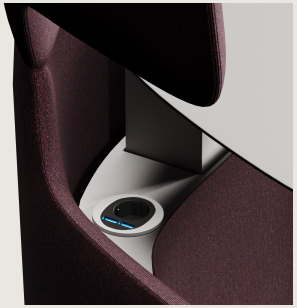

Dimension

Volume	0 m3 0 cbft3
Package	0
Weight	85 kg 187.39 lbs

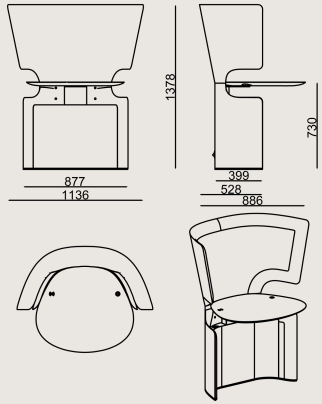

MINIPOD PRO S0 BASE FABRIC B
Overall Width: 1136 mm / 44.72”
Overall Depth: 886 mm / 34.88”
Overall Height: 1378 mm / 54.25”

COLORS & MATERIALS

Cable Cover Finishes



MINIPOD KABLO KAPAGI BEYAZ



MINIPOD KABLO KAPAGI ANTRASIT (RAL7021)

Metal Finishes



RAL 7021 ANTHRACITE EPOXY POWDER COATING

3101 WHITE POWDER COATING

Lacquered Finishes

RAL 9010 WHITE LACQUER



RAL 7021 ANTHRACITE LACQUER

Fabric Finishes

B Fabric: Era, Jet, Alba, KUMAS CAMIRA UPLAND, KUMAS GABRIEL TONAL
C Fabric: Furnilana, Torino, KUMAS GABRIEL GRAIN
D Fabric: Synergy, Main Line Flax, Iseo, Kvadrat Technicolour, KUMAS FIDIVI NABUCCO
E Fabric: Matera
F Fabric: Steelcut Trio, Craggan
B+ Fabric: Jeans, Kvadrat Guest, Kvadrat Telemia, KUMAS GABRIEL CYBER

Scan for all
colors & materials & catalogs