koleksiyon



Designed by
Studio Kairos

Boomerang

BOOMERANG S0 ARMCHAIR

Boomerang Armchair adds a refined touch to modern spaces with its minimalist form and iconic leg design. Its ergonomic seat angle offers a perfect blend of comfort and style.

Warranty / Cleaning & Maintenance

The warranty period is five years from the date of delivery. Check the QR code below, to see cleaning & maintenance information.

Production Time / Assembly Notes

6-8 weeks + Shipping
The product is delivered assembled.

Product Description

- The features a wooden structure interior frame.
- The armrests are integrated with the legs and made of polished solid ash wood.
- Different density foams are used in the seat and backrest.
- Protective furniture glides are attached to the bottom of the legs to protect the floor.

Product Details

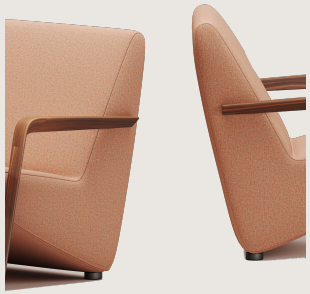

Dimension

Volume	0.46 m3 16.24 cbft3
Package	1
Weight	36 kg 79.37 lbs

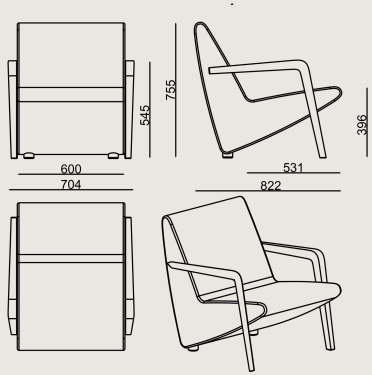

BOOMERANG S0 ARMCHAIR FABRIC A
Overall Width: 702 mm / 27.64”
Overall Depth: 822 mm / 32.36”
Overall Height: 755 mm / 29.72”
Seat Width: 600 mm / 23.62”
Seat Depth: 531 mm / 20.91”
Seat Height: 396 mm / 15.59”
Arm Height: 148 mm / 5.83”
For COM: Customer’s Own Material
2,5 meters / 2.19 yards of fabric required.

COLORS & MATERIALS

Veneer Finishes



SOLID WOOD 10.97
DEEP OAK FINISH

SOLID ASH WOOD
NATURAL FINISH

SOLID ASH WOOD
BLACK ANILINE
FINISH

Fabric Finishes

F Fabric: Steelcut Trio, Memory 2, Craggan, Credo, Twin

H Fabric: KUMAS KVADRAT CODA 2

A Fabric: FK028, PERSAN_HARDY, KUMAS FIDIVI RADIO

B Fabric: Era, Jet, Savana, Austin, Alba, Tanriverdi, Porto, Vanelli, KETS_CLASIC_VELVET, PERSAN_OLIVIA, KUMAS CAMIRA UPLAND, KUMAS GABRIEL TONAL

B+ Fabric: Jeans, Farinoso, Catch, FABRIMARE_JEROME, PERS_ARGELES_PLAIN, FABRIMARE_JAZZ, PERSAN_NODA, KUMAS CAMIRA REPLAY ZERO, KUMAS GABRIEL CYBER

C Fabric: Antares, Rivet, Furnilana, Torino, Gina, Taiga, Forte, Thor, FABRIMARE_GIMMEL, PERSAN_BURUNDI, PERSAN_JADON, PER_MALLORCA_PLAIN, PERSAN_BUKONO, PERSAN_BOLD_PLAIN, PERSAN_YAKI, KUMAS FIDIVI CLASS, KUMAS GABRIEL GRAIN

D Fabric: Synergy, Main Line Flax, Iseo, Duke, Avatar, Jupiter, PERSAN_EBRULI, PERSAN_VINCENT, KUMAS FIDIVI NABUCCO

E Fabric: Oceanic, Matera, Velvety, Onix, Supernova, Smilla, Ipanema, PERSAN_TEGAKI, PERSAN_PAOLA, PERSAN_LAGOS_KOMBN, PERSAN_LAGOS_PLAIN, PERSAN_KAMPALA, LAGOS_HERRINGBONE

Leather Finishes

B Leather: DERI MASTROTTO LINEA 622 NERO, Linea, Atlantic

Vita Artificial Leather: Vita Artificial Leathers

B Artificial Leather: Artificial Leathers B

Artificial Leather: Artificial Leathers

A Artificial Leather: Artificial Leathers A

Scan for all
colors & materials & catalogs