:koleksiyon



Designed by
Studio Kairos

Oscar

OSCAR S0 105 RIGHT DAYBED ARMC

Oscar is a modular sofa system that blends modern design with versatility, making it suitable for any living space. Its flexible configuration options provide both functionality and comfort. With armrest, armless, and chaise lounge alternatives, it offers customization to match personal preferences.

Warranty / Cleaning & Maintenance

The warranty period is five years from the date of delivery. Check the QR code below, to see cleaning & maintenance information.

Production Time / Assembly Notes

6-8 weeks + Shipping
The product is delivered assembled.

Product Description

• The features an internal structure with a steel frame.
• To ensure the necessary flexibility in the seating area, elastic webbing is applied to the seat frame and various density foams are used on top.
• The wooden base used on the bottom part of the sofas is finished in smoked oak veneer.
• A concealed 'crocodile' interlocking connector is employed to secure modular sections and prevent lateral movement.
• The legs are made of metal with a powder-coated finish.
• Protective furniture glides are attached to the bottom of the legs to protect the floor.

Dimension

Volume	0.84 m3 29.66 cbft3
Package	2
Weight	76 kg 167.55 lbs

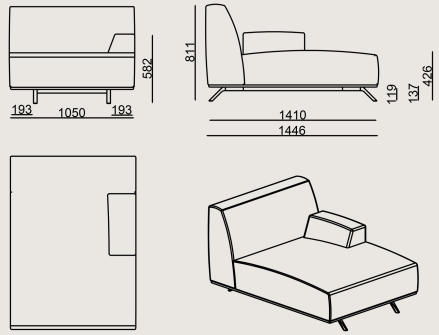

OSCAR S0 105 RIGHT DAYBED ARMCH FABRIC A
Overall Width: 1050 mm / 41.34”
Overall Depth: 1446 mm / 56.93”
Overall Height: 809 mm / 31.85”

COLORS & MATERIALS

Veneer Finishes



MDF + POLISHING
FOR 10.97 VENEER

Metal Finishes



METALLIC BROWN
POWDER COATING



METALLIC
ANTHRACITE
POWDER COATING

Fabric Finishes

A Fabric: FK028, PERSAN_HARDY

B Fabric: Era, Savana, Austin, Alba, Tanriverdi, Porto, KETS_CLASIC_VELVET, PERSAN_OLIVIA

C Fabric: Antares, Furnilana, Gina, Taiga, Forte, Thor, FABRIMARE_GIMMEL, PERSAN_BURUNDI, PERSAN_JADON, PER_MALLORCA_PLAIN, PERSAN_BUKONO, PERSAN_BOLD_PLAIN, PERSAN_YAKI

D Fabric: Synergy, Iseo, Duke, Avatar, Jupiter, Kvadrat Technicolour, PERSAN_EBRULI, PERSAN_VINCENT

E Fabric: Matera, Velvety, Onix, Supernova, Smilla, Ipanema, PERSAN_TEGAKI, PERSAN_PAOLA, PERSAN_LAGOS_KOMBN, PERSAN_LAGOS_PLAIN, PERSAN_KAMPALA, LAGOS_HERRINGBONE

F Fabric: Memory 2, Craggan, Credo, Twin

B+ Fabric: Farinoso, Catch, Kvadrat Autumn, Kvadrat Guest, Kvadrat Telemia, FABRIMARE_JEROME, PERS_ARGELES_PLAIN, FABRIMARE_JAZZ, PERSAN_NODA

H Fabric: KUMAS KVADRAT CODA 2

Scan for all
colors & materials & catalogs