:koleksiyon



Designed by
**Studio Kairos**

# Quo Vadis

**QUO VADIS EXC S7 D1024L**

Quo Vadis is an ergonomic and elegant executive desk system, combining functionality with refined design for enhanced productivity and style.

## Warranty / Cleaning & Maintenance

The warranty period is five years from the date of delivery. Check the QR code below, to see cleaning & maintenance information.

## Production Time / Assembly Notes

6-8 weeks + Shipping
The product is delivered disassembled.

## Product Description

• The tabletop is polished with a natural veneer over 18 mm MDF, enclosed in a wood-veneered aluminum frame.
• The tabletop includes a metal cable cover with the same veneer characteristics as the tabletop.
• Under the tabletop is a powder-coated sheet-metal cable tray that carries the cables.
• The table front panel is painted with lacquer over 18 mm MDF.
• The cabinet's body and doors are polished with a natural veneer.
• The cabinet doors feature powder-coated aluminum handles.
• The cabinet shelves and interior partitions are laminated over chipboard.
• The cabinet drawer cassettes are lacquered over 12 mm MDF, and the drawer bottoms are fabric-covered.
• The cabinet drawer area includes a central locking system.
• The legs are wrapped and polished with natural veneer over aluminum profiles.

## Dimension

| | | |
|---|---|---|
| | Volume | 0 m3<br>0 cbft3 |
| | Package | 3 |
| | Weight | 0 kg<br>0 lbs |

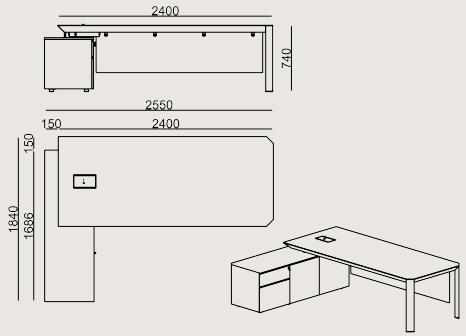


QUO VADIS EXC S7 D1024L VENEER
**Overall Width:** 2550 mm / 100.39”
**Overall Depth:** 1840 mm / 72.44”
**Overall Height:** 740 mm / 29.13”

## COLORS & MATERIALS

### Veneer Finishes


10.16 CARDINAL STRIPED FINISH


10.97 DEEP OAK FINISH


18.22 XILO PLANKED SAND FINISH

### Metal Finishes


METALLIC ANTHRACITE POWDER COATING

Scan for all
colors & materials & catalogs