:koleksiyon



Designed by
Jean Nouvel

Vienna

VIENNA S0 81 ARMCH

Vienna, designed by Jean Nouvel, is a series of armchairs, sofa modules, and coffee tables that stand out with their clear and sharp lines. While offering high comfort in office environments, it draws attention with its striking geometry in offices and common areas.

Warranty / Cleaning & Maintenance

The warranty period is five years from the date of delivery. Check the QR code below, to see cleaning & maintenance information.

Production Time / Assembly Notes

6-8 weeks + Shipping
The product is delivered assembled.

Product Description

• The features a wooden structure interior frame.
• To ensure the necessary flexibility in the seating area, elastic webbing is applied to the seat frame and various density foams are used on top.
• The unit is equipped with 18 mm high black plastic feet.

Dimension

Volume	0.64 m3 22.6 cbft3
Package	1
Weight	40 kg 88.18 lbs

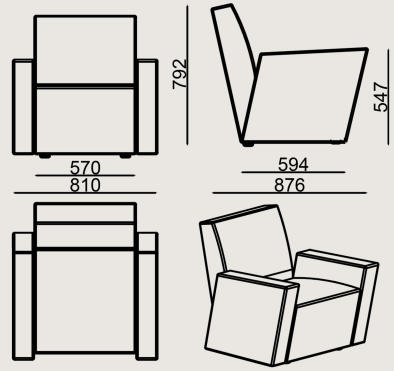

VIENNA S0 81 ARMC FABRIC A
Overall Width: 810 mm / 31.89”
Overall Depth: 876 mm / 34.49”
Overall Height: 792 mm / 31.18”
Seat Width: 594 mm / 23.39”
Seat Depth: 594 mm / 23.39”
Seat Height: 411 mm / 16.18”
Arm Height: 547 mm / 21.54”
For COL: Customer’s Own Leather
950 dm2 / 102.26 sq.ft of leather required.
For COM: Customer’s Own Material
5 meters / 5.47 yards of fabric required.

COLORS & MATERIALS

Fabric Finishes

A Fabric: FK028, KUMAS FIDIVI RADIO
B Fabric: Era, Alba, Tanriverdi, Porto, KUMAS CAMIRA UPLAND, KUMAS GABRIEL TONAL
C Fabric: Rivet, Furnilana, Taiga, Forte, Thor, KUMAS FIDIVI CLASS, KUMAS GABRIEL GRAIN
D Fabric: Synergy, Main Line Flax, Iseo, Avatar, Jupiter, Kvadrat Technicolour, KUMAS FIDIVI NABUCCO
E Fabric: Oceanic, Matera, Supernova, Smilla, Ipanema
F Fabric: Memory 2, Steelcut Trio, Craggan
B+ Fabric: Catch, Kvadrat Autumn, Kvadrat Guest, Kvadrat Telemia, KUMAS GABRIEL CYBER
H Fabric: KUMAS KVADRAT CODA 2

Leather Finishes

Artificial Leather: Artificial Leathers
A Artificial Leather: Artificial Leathers A
Vita Artificial Leather: Vita Artificial Leathers
B Leather: DERI MASTROTTO LINEA 622 NERO, Linea, Atlantic
B Artificial Leather: Artificial Leathers B

Scan for all
colors & materials & catalogs