koleksiyon



Designed by
Koray Malhan

Savio

SAVIO S0 MIDDLE ARMCHAIR

Savio is a modular sofa group designed to meet modern needs, combining a classic design approach with clean lines, a spacious and deep seating area, and innovative technological details.

Warranty / Cleaning & Maintenance

The warranty period is five years from the date of delivery. Check the QR code below, to see cleaning & maintenance information.

Production Time / Assembly Notes

6-8 weeks + Shipping
The product is delivered disassembled.

Product Description

• The features a wooden structure interior frame.
• To ensure the necessary flexibility in the seating area, elastic webbing is applied to the seat frame and various density foams are used on top.
• The back cushions are filled with a proprietary blend of materials developed by Koleksiyon.
• Piping detail is featured on both the cushion covers and the upholstery of the frame.
• Thanks to its modular structure, the sofas can be connected using metal brackets.
• The legs are made of polished solid ash.

Dimension

Volume	1.02 m3 36.02 cbft3
Package	1
Weight	55 kg 121.25 lbs

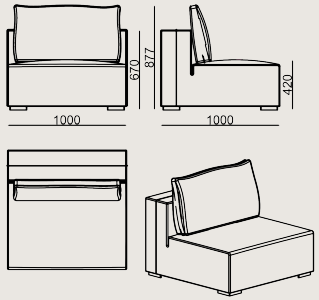

SAVIO S0 MIDDLE ARMCHAIR FABRIC A
Overall Width: 1000 mm / 39.37”
Overall Depth: 1000 mm / 39.37”
Overall Height: 882 mm / 34.72”

COLORS & MATERIALS

Veneer Finishes



SOLID WOOD 10.97 DEEP OAK FINISH

SOLID ASH WOOD NATURAL FINISH

SOLID ASH WOOD BLACK ANILINE FINISH

Fabric Finishes

A Fabric: FK028, PERSAN_HARDY, Sole

B Fabric: Era, Savana, Austin, Alba, Tanriverdi, Porto, KETS_CLASIC_VELVET, PERSAN_OLIVIA

C Fabric: Furnilana, Gina, Taiga, Forte, Thor, FABRIMARE_GIMMEL, PERSAN_BURUNDI, PER_MALLORCA_PLAIN, PERSAN_BUKONO, PERSAN_BOLD_PLAIN, PERSAN_YAKI

D Fabric: Synergy, Main Line Flax, Iseo, Duke, Avatar, Jupiter, Kvadrat Technicolour, PERSAN_EBRULI, PERSAN_VINCENT

E Fabric: Matera, Velvety, Onix, Supernova, Smilla, Ipanema, PERSAN_TEGAKI, PERSAN_PAOLA, PERSAN_LAGOS_KOMBN, PERSAN_LAGOS_PLAIN, PERSAN_KAMPALA, LAGOS_HERRINGBONE

F Fabric: Craggan, Credo, Twin, Massa, Chic

B+ Fabric: Farinoso, Catch, Kvadrat Autumn, Kvadrat Guest, Kvadrat Telemia, PERS_ARGELES_PLAIN, FABRIMARE_JAZZ, PERSAN_NODA

Leather Finishes

Artificial Leather: Artificial Leathers
A Artificial Leather: Artificial Leathers A
Vita Artificial Leather: Vita Artificial Leathers
B Leather: DERI MASTROTTO LINEA 622 NERO, Linea, Atlantic
B Artificial Leather: Artificial Leathers B

Scan for all
colors & materials & catalogs