:koleksiyon



Designed by
Studio Kairos

Calvino

CALVINO S6 D1616R

Designed by Studio Kairos, Calvino is a functional desk system created for open-plan offices and individual workspaces. Its modular structure, integrated cable management solutions, and practical shelving options support an organized and efficient work environment while maintaining a clean and contemporary aesthetic.

Warranty / Cleaning & Maintenance

The warranty period is five years from the date of delivery. Check the QR code below, to see cleaning & maintenance information.

Production Time / Assembly Notes

6-8 weeks + Shipping
The product is delivered disassembled.

Product Description

• Single-user workstation with an integrated meeting extension.
• The workstation includes two storage units: one drawer pedestal and one cabinet with doors. A system unit provides power access to the desktop through a circular opening in the bottom tray.
• The top drawer and cabinet door are lockable. The product is supplied with two keys.
• The drawer pedestal features a central locking system.
• The workstation includes one powder-coated sheet metal cable grommet and an under-desk cable management tray.

Dimension

Volume	0.84 m3 29.66 cbft3
Package	3
Weight	0 kg 0 lbs

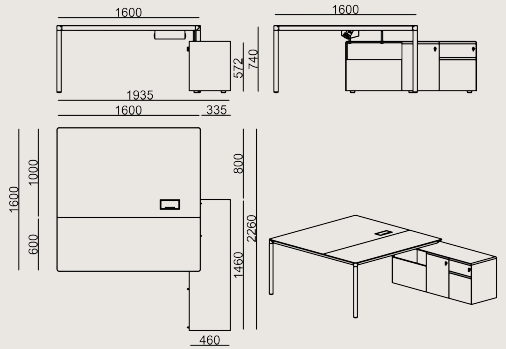

CLV S6 D1616R VENEER EPXY LEATHER
Overall Width: 1600 mm / 62.99”
Overall Depth: 1600 mm / 62.99”
Overall Height: 740 mm / 29.13”

COLORS & MATERIALS

Veneer Finishes


10.16 CARDINAL STRIPED FINISH


10.97 DEEP OAK FINISH


18.22 XILO PLANKED SAND FINISH

Metal Finishes


RAL7044 POWDER COATING


SATIN POWDER COATING

3101 WHITE POWDER COATING


METALLIC BROWN POWDER COATING


METALLIC ANTHRACITE POWDER COATING


SANDY GREY POWDER COATING

Leather Finishes

B Leather: Linea, Atlantic, DERI MASTROTTO LINEA 622 NERO

Scan for all
colors & materials & catalogs