:koleksiyon



Designed by
Faruk Malhan

Convivium

CONVIVIUM TPL S0 TM130Y EP

Convivium is a modern and functional meeting table designed to enhance collaboration and efficiency. Its integrated cable management and ergonomic design create an organized workspace. With durable materials, it offers both aesthetics and long-lasting use.

Warranty / Cleaning & Maintenance

The warranty period is five years from the date of delivery. Check the QR code below, to see cleaning & maintenance information.

Production Time / Assembly Notes

6-8 weeks + Shipping
The product is delivered disassembled.

Product Description

- Each model features a powder-coated sheet metal cable management channel along the center.
- The tabletop has a thickness of 25mm.
- In laminated tabletop options, the cable cover is powder-coated over an aluminum profile, and the legs are anodized.
- In veneered tabletop options, the cable cover is veneered over an aluminum profile, and the legs are produced with the selected veneer finish.

Dimension

Volume	0.22 m3 7.77 cbft3
Package	4
Weight	41.75 kg 92.04 lbs

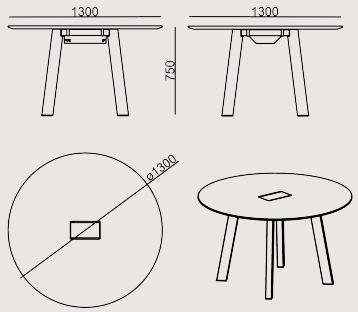

CONVIVIUM MTNG S0 TM130Y VENEER
Overall Width: 1290 mm / 50.79”
Overall Depth: 1290 mm / 50.79”
Overall Height: 750 mm / 29.53”
Overall Diameter: 1290 mm / 50.79”

COLORS & MATERIALS

Veneer Finishes


10.16 CARDINAL STRIPED FINISH


10.97 DEEP OAK FINISH


18.22 XILO PLANKED SAND FINISH

Metal Finishes


METALLIC BROWN POWDER COATING


METALLIC ANTHRACITE POWDER COATING

Laminate Finishes


A610 CABANA VNR


A662 REMBRANDT ART

D264 BONY DÜZ

D218 KASMIR NTR


D142 GRANIT NTR


D164 LUNA NTR

Scan for all
colors & materials & catalogs