koleksiyon



Designed by
Koray Malhan

Merlin

MERLIN S0 ARMCHAIR UCT

Merlin chair features a versatile design that adapts to various settings with its different base options. Its soft polyurethane shell, molded over a metal frame, offers a perfect balance of comfort and elegance.

Warranty / Cleaning & Maintenance

The warranty period is five years from the date of delivery. Check the QR code below, to see cleaning & maintenance information.

Production Time / Assembly Notes

6-8 weeks + Shipping

The product is delivered assembled.

Product Description

- Soft polyurethane shell molded over a metal frame.
- Swivel mechanism and chrome-plated base.
- Black plastic castors for soft floors.

*Casters suitable for hard floors must be ordered separately.

Dimension

Volume	0.5 m3 17.66 cbft3
Package	1
Weight	14.55 kg 32.08 lbs

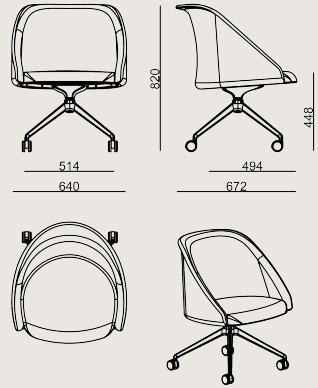

MERLIN S0 ARMC UCT FABRIC A
Overall Width: 640 mm / 25.2”
Overall Depth: 672 mm / 26.46”
Overall Height: 820 mm / 32.28”
Seat Width: 514 mm / 20.24”
Seat Depth: 494 mm / 19.45”
Seat Height: 448 mm / 17.64”
For COL: Customer’s Own Leather
350 dm2 / 37.67 sq.ft of leather required.
For COM: Customer’s Own Material
2 meters / 2.19 yards of fabric required.

COLORS & MATERIALS

Metal Finishes



CHROME

Fabric Finishes

A Fabric: KUMAS FIDIVI RADIO

B Fabric: Era, Jet, Austin, Alba, KUMAS CAMIRA UPLAND, KUMAS GABRIEL TONAL

C Fabric: Rivet, Furnilana, Torino, KUMAS FIDIVI CLASS, KUMAS GABRIEL GRAIN

D Fabric: Synergy, Main Line Flax, Iseo, Kvadrat Technicolour, KUMAS FIDIVI NABUCCO

E Fabric: Oceanic, Matera

F Fabric: Memory 2, Steelcut Trio, Craggan

B+ Fabric: Jeans, Kvadrat Autumn, Kvadrat Guest, Kvadrat Telemia, KUMAS CAMIRA REPLAY ZERO, KUMAS GABRIEL CYBER

H Fabric: KUMAS KVADRAT CODA 2

Leather Finishes

Artificial Leather: Artificial Leathers

A Artificial Leather: Artificial Leathers A

Vita Artificial Leather: Vita Artificial Leathers

B Leather: DERI MASTROTTO LINEA 622 NERO, Linea, Atlantic

B Artificial Leather: Artificial Leathers B

Scan for all
colors & materials & catalogs