:koleksiyon



Designed by
Studio Kairos

Calvino

CALVINO S6 D0824L

Designed by Studio Kairos, Calvino is a functional desk system created for open-plan offices and individual workspaces. Its modular structure, integrated cable management solutions, and practical shelving options support an organized and efficient work environment while maintaining a clean and contemporary aesthetic.

Warranty / Cleaning & Maintenance

The warranty period is five years from the date of delivery. Check the QR code below, to see cleaning & maintenance information.

Production Time / Assembly Notes

6-8 weeks + Shipping
The product is delivered disassembled.

Product Description

• Single-user workstation with an integrated meeting extension.
• The workstation includes two storage units: one drawer pedestal and one cabinet with doors. A system unit provides power access to the desktop through a circular opening in the bottom tray.
• The top drawer and cabinet door are lockable. The product is supplied with two keys.
• The drawer pedestal features a central locking system.
• The workstation includes one powder-coated sheet metal cable grommet and an under-desk cable management tray.

Product Details



Dimension

Volume	0.77 m3 27.19 cbft3
Package	3
Weight	111.25 kg 245.26 lbs

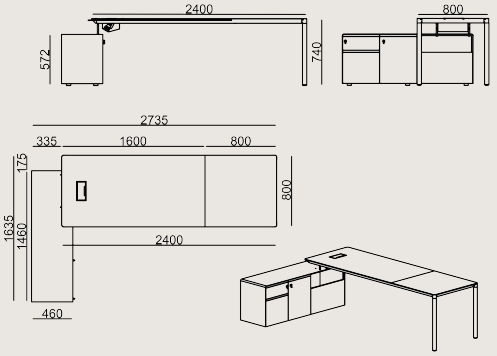

CLV S6 D0824L VENEER LQ EPXY
Overall Width: 2400 mm / 94.49”
Overall Depth: 800 mm / 31.5”
Overall Height: 740 mm / 29.13”

COLORS & MATERIALS

Veneer Finishes



10.97 DEEP OAK FINISH



18.22 XILO PLANKED SAND FINISH



10.16 CARDINAL STRIPED FINISH

Metal Finishes



RAL7044 POWDER COATING



SATIN POWDER COATING

3101 WHITE POWDER COATING



METALLIC BROWN POWDER COATING



METALLIC ANTHRACITE POWDER COATING



SANDY GREY POWDER COATING

Laminate Finishes



A610 CABANA VNR



A662 REMBRANDT ART

D264 BONY DÜZ

D218 KASMIR NTR



D142 GRANIT NTR



D164 LUNA NTR

Lacquered Finishes



RAL 7006K BROWN LACQUER



RAL 8019 DARK BROWN LACQUER



VRN 2191 DARK BEIGE LACQUER

Scan for all
colors & materials & catalogs