:koleksiyon



Designed by
Jan & Gernot

Dilim

DİLİM S0 AGT 199 SOFA

Dilim is a modular sofa designed for offices, hotels, bars, and waiting areas. It offers customizable fabric and color options, various sizes and layouts, and integrates easily with other furniture systems.

Warranty / Cleaning & Maintenance

The warranty period is five years from the date of delivery. Check the QR code below, to see cleaning & maintenance information.

Production Time / Assembly Notes

6-8 weeks + Shipping
The product is delivered assembled.

Product Description

• The frame consists of foams of varying densities placed on a metal structure.
• Each segment can be upholstered with different fabrics.
• Modules can be connected to each other with metal brackets.
• The legs are made of black plastic.

Dimension

Volume	1.72 m3 60.74 cbft3
Package	1
Weight	52 kg 114.64 lbs

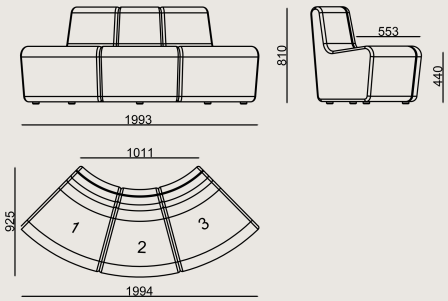

DILIM S0 AGT 199 SOFA FABRIC B
Overall Width: 1994 mm / 78.5”
Overall Depth: 925 mm / 36.42”
Overall Height: 810 mm / 31.89”

COLORS & MATERIALS

Fabric Finishes

B Fabric: Era, Alba, KUMAS CAMIRA UPLAND, KUMAS GABRIEL TONAL
E Fabric: Matera
D Fabric: Synergy, Main Line Flax, Kvadrat Technicolour, KUMAS FIDIVI NABUCCO
C Fabric: Furnilana, KUMAS GABRIEL GRAIN
B+ Fabric: Kvadrat Autumn, Kvadrat Guest, Kvadrat Telemia, KUMAS CAMIRA REPLAY ZERO, KUMAS GABRIEL CYBER
H Fabric: KUMAS KVADRAT CODA 2

Scan for all
colors & materials & catalogs