:koleksiyon



Designed by
Jan & Gernot

Dilim

DİLİM S0 KŞP 74 POUF

Dilim is a modular sofa designed for offices, hotels, bars, and waiting areas. It offers customizable fabric and color options, various sizes and layouts, and integrates easily with other furniture systems.

Warranty / Cleaning & Maintenance

The warranty period is five years from the date of delivery. Check the QR code below, to see cleaning & maintenance information.

Production Time / Assembly Notes

6-8 weeks + Shipping
The product is delivered assembled.

Product Description

• The frame consists of foams of varying densities placed on a metal structure.
• The legs are made of black plastic.

Dimension

Volume	0.4 m3 14.13 cbft3
Package	1
Weight	13 kg 28.66 lbs

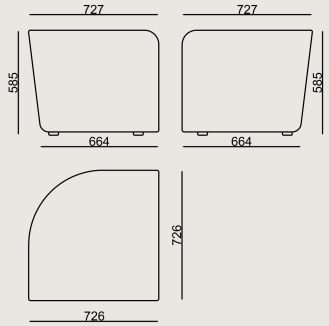

DILIM S0 KSP 74 POUF FABRIC B
Overall Width: 747 mm / 29.41”
Overall Depth: 747 mm / 29.41”
Overall Height: 585 mm / 23.03”

COLORS & MATERIALS

Fabric Finishes

B Fabric: Era, Alba, KUMAS CAMIRA UPLAND, KUMAS GABRIEL TONAL
C Fabric: Furnilana, KUMAS GABRIEL GRAIN
D Fabric: Synergy, Main Line Flax, Kvadrat Technicolour, KUMAS FIDIVI NABUCCO
B+ Fabric: Kvadrat Autumn, Kvadrat Guest, Kvadrat Telemia, KUMAS CAMIRA REPLAY ZERO, KUMAS GABRIEL CYBER
H Fabric: KUMAS KVADRAT CODA 2

Scan for all
colors & materials & catalogs