:koleksiyon

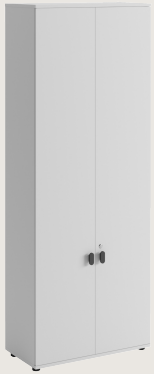

Designed by
Faruk Malhan

Doffice

DOFFICE DOLAP S2 622

Doffice designed by Faruk Malhan is a living space composed of various cabinets to serve all the storage needs in workplaces through different modules and sizes. In this system, a wide variety of storage units with drawers or hinged doors are presented.

Warranty / Cleaning & Maintenance

The warranty period is five years from the date of delivery. Check the QR code below, to see cleaning & maintenance information.

Production Time / Assembly Notes

6-8 weeks + Shipping
The product is delivered disassembled.

Product Description

- The unit come in laminated top table, shelves, doors and back.
- The unit body is made of laminate.
- This option feature set of five laminated interior shelves.
- The right storage door features a lock, and both doors feature aluminum handles.
- All models feature black plastic glides.

Dimension

Volume	0.25 m3 8.83 cbft3
Package	4
Weight	74 kg 163.14 lbs

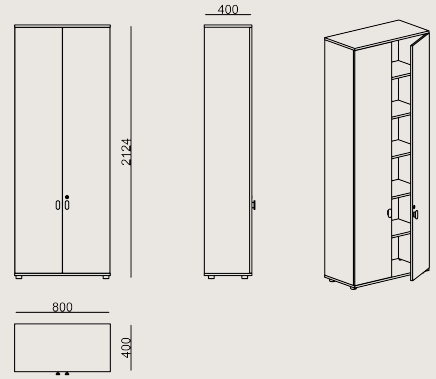

DOFFICE STORAGE S2 622 MELAMINE
Overall Width: 800 mm / 31.5”
Overall Depth: 400 mm / 15.75”
Overall Height: 2124 mm / 83.62”

COLORS & MATERIALS

Metal Finishes

RAL7044 POWDER COATING
SATIN POWDER COATING
3101 WHITE POWDER COATING
METALLIC BROWN POWDER COATING
METALLIC ANTHRACITE POWDER COATING
SANDY GREY POWDER COATING

Laminate Finishes

A610 CABANA VNR
A662 REMBRANDT ART
D264 BONY DÜZ
D218 KASMIR NTR
D142 GRANIT NTR
D164 LUNA NTR

Scan for all
colors & materials & catalogs