koleksiyon



Designed by
**Faruk Malhan**

# Doffice

**DOFFICE DOLAP S2 522**

Doffice designed by Faruk Malhan is a living space composed of various cabinets to serve all the storage needs in workplaces through different modules and sizes. In this system, a wide variety of storage units with drawers or hinged doors are presented.

## Warranty / Cleaning & Maintenance

The warranty period is five years from the date of delivery. Check the QR code below, to see cleaning & maintenance information.

## Production Time / Assembly Notes

6-8 weeks + Shipping
The product is delivered disassembled.

## Product Description

- The unit come in laminated top table, shelves, doors and back.
- The unit body is made of laminate.
- This option feature quad laminated interior shelves.
- The right storage door features a lock, and both doors feature aluminum handles.
- All models feature black plastic glides.

## Dimension

| | |
|---|---|
| Volume | 0.22 m3<br>7.77 cbft3 |
| Package | 4 |
| Weight | 62 kg<br>136.69 lbs |

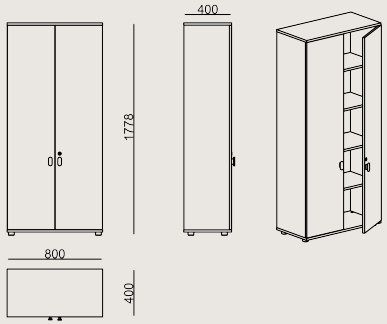


DOFFICE STORAGE S2 522 MELAMINE
**Overall Width:** 800 mm / 31.5”
**Overall Depth:** 400 mm / 15.75”
**Overall Height:** 1778 mm / 70”

## COLORS & MATERIALS

### Metal Finishes

RAL7044 POWDER COATING
SATIN POWDER COATING
3101 WHITE POWDER COATING
METALLIC BROWN POWDER COATING
METALLIC ANTHRACITE POWDER COATING
SANDY GREY POWDER COATING

### Laminate Finishes

A610 CABANA VNR
A662 REMBRANDT ART
D264 BONY DÜZ
D218 KASMIR NTR
D142 GRANIT NTR
D164 LUNA NTR

Scan for all
colors & materials & catalogs