koleksiyon



Designed by
Faruk Malhan

Tango

TANGO S0 TBTG204M

Tango dining table adds elegance to any space with its modern lines and refined style. Its sturdy metal legs and sleek top offer both visual appeal and everyday functionality.

Warranty / Cleaning & Maintenance

The warranty period is five years from the date of delivery. Check the QR code below, to see cleaning & maintenance information.

Production Time / Assembly Notes

6-8 weeks + Shipping
The product is delivered disassembled.

Product Description

• The table top consists of 5 mm marble combined with 5 mm composite material.
• The laminated marble tabletop is supported by a lacquered painted 18mm MDF.
• The legs are powder-coated metal.

Dimension

Volume	0.54 m3 19.07 cbft3
Package	4
Weight	124.5 kg 274.48 lbs

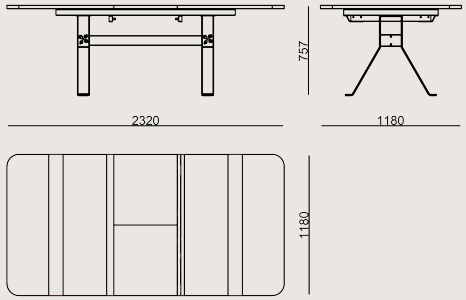

TANGO S0 TBTG204M MARBLE EPOXY
Overall Width: 2040 mm / 80.32”
Overall Depth: 1020 mm / 40.16”
Overall Height: 760 mm / 29.92”

COLORS & MATERIALS

Metal Finishes


METALLIC BROWN POWDER COATING


METALLIC ANTHRACITE POWDER COATING

Marble Finishes


MARBLE BRUNO PERLA


MARBLE VEGA LIGHT


MARBLE FOREST STONE


MARBLE VETRA BURGUNDY


MARBLE CALACATTA HELENA


MARBLE CAPELLA

Scan for all
colors & materials & catalogs