koleksiyon



Designed by
Faruk Malhan

Nabu

NABU S5 WRITING DESK A10.97

The Nabu Desk is a stylish and functional choice for modern workspaces. Its top compartment with a covered shelf keeps books and office supplies organized, while the spacious surface ensures comfort. The natural wood texture adds warmth and elegance to any space.

Warranty / Cleaning & Maintenance

The warranty period is five years from the date of delivery. Check the QR code below, to see cleaning & maintenance information.

Production Time / Assembly Notes

6-8 weeks + Shipping
The product is delivered disassembled.

Product Description

• The body and panels are made of veneered carcass board, plywood, and MDF components.
• The top and front covers feature laser-cut patterns and 2 mm PAPEL edging.
• Black anodized aluminum is used for the intermediate rails, while the legs and drawer boxes are made of solid wood.
• Dimensions: 555 × 1348 × 1135 mm.

Dimension

Volume	0.55 m3 19.42 cbft3
Package	3
Weight	89 kg 196.21 lbs

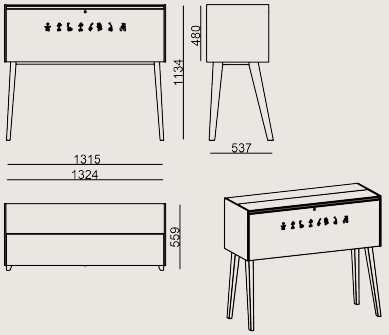

NABU S5 WRITING DESK VENEERED
Overall Width: 1350 mm / 53.15”
Overall Depth: 537 mm / 21.14”
Overall Height: 1135 mm / 44.69”

COLORS & MATERIALS

Scan for all
colors & materials & catalogs