:koleksiyon



Designed by
Koray Malhan

Rarum

RARUM EXC S2 1C1K

Rarum is a stylish storage unit that doubles as a room divider or wall feature. With spacious drawers and open shelves, it offers both function and form—creating visual depth and display space that enhances any interior.

Warranty / Cleaning & Maintenance

The warranty period is five years from the date of delivery. Check the QR code below, to see cleaning & maintenance information.

Production Time / Assembly Notes

6-8 weeks + Shipping
The product is delivered disassembled.

Product Description

- The horizontal shelf tops are lacquered MDF.
- The side panels, drawing doors, and inner compartment dividers can be ordered in veneered or lacquered MDF.
- The metal structures between the upper and lower compartments are powder coated extruded aluminum.
- The bottom compartment features a full-extension drawer, while the top compartment has a drop down drawer front.
- The base consists of adjustable leveler glides to adapt to varying floor levels.

Dimension

Volume	0.83 m3 29.31 cbft3
Package	2
Weight	105 kg 231.49 lbs

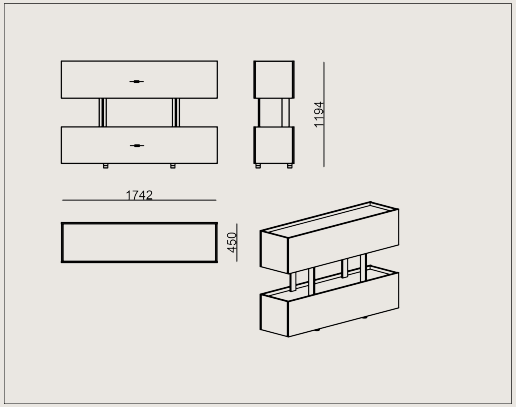

RARUM EXC S2 1C1K VENEER
Overall Width: 1742 mm / 68.58”
Overall Depth: 450 mm / 17.72”
Overall Height: 1170 mm / 46.06”

COLORS & MATERIALS

Veneer Finishes


10.16 CARDINAL STRIPED FINISH


10.97 DEEP OAK FINISH

Lacquered Finishes


RAL 9011 BLACK LACQUER


GREY BEIGE LACQUER


RAL 7006K BROWN LACQUER


RAL 3007 BURGUNDY LACQUER


VRN 2188 LIGHT BEIGE LACQUER


VRN 2191 DARK BEIGE LACQUER

Scan for all
colors & materials & catalogs