:koleksiyon



Designed by
Faruk Malhan

Suenios

SUENIOS S4 BDSU120F

The Suenios bed is available in 120 cm, 160 cm, and 180 cm sizes, with customizable fabric and color options. Its comfortable structure and durable frame add both aesthetics and functionality to any bedroom.

Warranty / Cleaning & Maintenance

The warranty period is five years from the date of delivery. Check the QR code below, to see cleaning & maintenance information.

Production Time / Assembly Notes

6-8 weeks + Shipping
The product is delivered disassembled.

Product Description

• The headboard is constructed with a plywood frame, covered with foam and fabric.
• The side and foot traverses are made of MDF, also covered with foam and fabric.
• The wooden slats under the bed are mounted on a 20x40x2 mm steel frame, which is also coated with electrostatic powder paint for durability.
• The legs are produced with tubular profiles and finished with a powder-coated surface.

Dimension

Volume	0.31 m3 10.95 cbft3
Package	4
Weight	0 kg 0 lbs

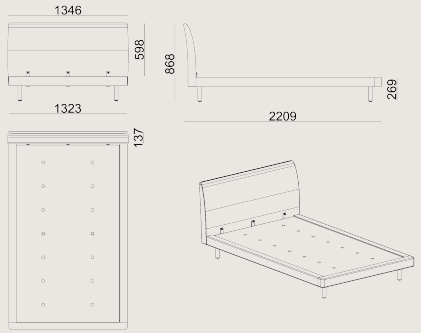

SUENIOS S4 BDSU120F FABRIC A
Overall Width: 2210 mm / 87.01”
Overall Depth: 1346 mm / 52.99”
Overall Height: 900 mm / 35.43”

COLORS & MATERIALS

Metal Finishes



METALLIC
ANTHRACITE
POWDER COATING

Fabric Finishes

A Fabric: FK028, PERSAN_HARDY
B Fabric: Austin, Tanriverdi, Porto, KETS_CLASIC_VELVET, PERSAN_OLIVIA
C Fabric: Antares, Gina, Taiga, Forte, Thor, PERSAN_BURUNDI, PERSAN_JADON, PER_MALLORCA_PLAIN, PERSAN_BUKONO, PERSAN_BOLD_PLAIN, PERSAN_YAKI
D Fabric: Duke, Avatar, Jupiter, Kvadrat Technicolour, PERSAN_EBRULI, PERSAN_VINCENT
E Fabric: Supernova, Smilla, Ipanema, PERSAN_TEGAKI, PERSAN_PAOLA, PERSAN_LAGOS_KOMBN, PERSAN_LAGOS_PLAIN, PERSAN_KAMPALA, LAGOS_HERRINGBONE
F Fabric: Craggan
B+ Fabric: Farinoso, Catch, Kvadrat Autumn, Kvadrat Guest, Kvadrat Telemia, FABRIMARE_JEROME, PERS_ARGELES_PLAIN, FABRIMARE_JAZZ, PERSAN_NODA

Leather Finishes

Artificial Leather: Artificial Leathers
A Artificial Leather: Artificial Leathers A

Scan for all
colors & materials & catalogs