:koleksiyon



Designed by
Eckard Hansen-Gerhard Reichert

Tristan

TRISTAN S6 VISITOR CHR 23DS E

Tristan, which stands out for its innovative style, was designed by Gerhard Reichert and Eckhard Hansen in 2000. Designed to meet the various needs of different work cultures, Tristan is a family consisting of visitor armchairs as well as meeting and seminar models.

Warranty / Cleaning & Maintenance

The warranty period is five years from the date of delivery. Check the QR code below, to see cleaning & maintenance information.

Production Time / Assembly Notes

6-8 weeks + Shipping
The product is delivered assembled.

Product Description

- Polyurethane padded seat and backrest.
- Black plastic armrests.
- Metal legs with chrome plating or powder coating.
- Equipped with brake-unloaded plastic casters compatible with soft flooring.*

*Casters for hard floor use are available; please specify and order separately.

Dimension

Volume	0.35 m3 12.36 cbft3
Package	1
Weight	8 kg 17.64 lbs

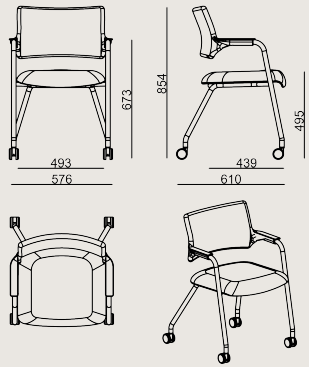

TRISTAN S6 VSTR CHR 23 N DS EP FBR A
Overall Width: 576 mm / 22.68”
Overall Depth: 610 mm / 24.02”
Overall Height: 854 mm / 33.62”
Seat Width: 493 mm / 19.41”
Seat Depth: 439 mm / 17.28”
Seat Height: 495 mm / 19.49”
Arm Height: 673 mm / 26.5”
For COL: Customer’s Own Leather
100 dm2 / 10.76 sq.ft of leather required.
For COM: Customer’s Own Material
1 meters / 1.09 yards of fabric required.

COLORS & MATERIALS

Metal Finishes



METALLIC ANTHRACITE POWDER COATING



CHROME

Fabric Finishes

A Fabric: Crepe, FK028, İstanbul, KUMAS FIDIVI RADIO

B Fabric: Era, Valor, Jet, Alba, KUMAS CAMIRA UPLAND

C Fabric: Rivet, Furnilana, Torino, KUMAS FIDIVI CLASS, KUMAS GABRIEL GRAIN

D Fabric: Synergy, Main Line Flax, Iseo, Kvadrat Technicolour, KUMAS FIDIVI NABUCCO

E Fabric: Oceanic, Matera

F Fabric: Memory 2, Steelcut Trio, Craggan

B+ Fabric: Jeans, Kvadrat Autumn, Kvadrat Guest, Kvadrat Telemia, KUMAS CAMIRA REPLAY ZERO, KUMAS GABRIEL CYBER

Leather Finishes

Vita Artificial Leather: Vita Artificial Leathers

Artificial Leather: Artificial Leathers

A Artificial Leather: Artificial Leathers A

B Leather: DERI MASTROTTO LINEA 622 NERO, Linea, Atlantic

B Artificial Leather: Artificial Leathers B

Scan for all
colors & materials & catalogs