:koleksiyon



Designed by
Eckard Hansen-Gerhard Reichert

Tristan

TRISTAN S6 VISITOR CHR 25NDS E

Tristan, which stands out for its innovative style, was designed by Gerhard Reichert and Eckhard Hansen in 2000. Designed to meet the various needs of different work cultures, Tristan is a family consisting of visitor armchairs as well as meeting and seminar models.

Warranty / Cleaning & Maintenance

The warranty period is five years from the date of delivery. Check the QR code below, to see cleaning & maintenance information.

Production Time / Assembly Notes

6-8 weeks + Shipping
The product is delivered assembled.

Product Description

- Polyurethane padded seat and backrest.
- Black plastic armrests.
- Metal legs with chrome plating or powder coating.
- Protective glides are attached to the bottom of the legs to protect the floor.

Dimension

Volume	0.35 m3 12.36 cbft3
Package	1
Weight	12.2 kg 26.9 lbs

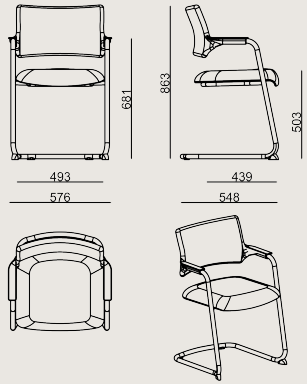

TRISTAN S6 VSTR CHR 25 N DS EP FBR A
Overall Width: 576 mm / 22.68”
Overall Depth: 548 mm / 21.57”
Overall Height: 863 mm / 33.98”
Seat Width: 493 mm / 19.41”
Seat Depth: 439 mm / 17.28”
Seat Height: 503 mm / 19.8”
Arm Height: 681 mm / 26.81”
For COL: Customer’s Own Leather
100 dm2 / 10.76 sq.ft of leather required.
For COM: Customer’s Own Material
1 meters / 1.09 yards of fabric required.

COLORS & MATERIALS

Metal Finishes



METALLIC ANTHRACITE POWDER COATING



CHROME

Fabric Finishes

A Fabric: Crepe, FK028, İstanbul, KUMAS FIDIVI RADIO
B Fabric: Era, Valor, Jet, Alba, KUMAS CAMIRA UPLAND
C Fabric: Rivet, Furnilana, Torino, KUMAS FIDIVI CLASS, KUMAS GABRIEL GRAIN
D Fabric: Synergy, Main Line Flax, Iseo, Kvadrat Technicolour, KUMAS FIDIVI NABUCCO
E Fabric: Oceanic, Matera
F Fabric: Memory 2, Steelcut Trio, Craggan
B+ Fabric: Jeans, Kvadrat Autumn, Kvadrat Guest, Kvadrat Telemia, KUMAS CAMIRA REPLAY ZERO, KUMAS GABRIEL CYBER

Leather Finishes

Artificial Leather: Artificial Leathers
A Artificial Leather: Artificial Leathers A
Vita Artificial Leather: Vita Artificial Leathers
B Leather: DERI MASTROTTO LINEA 622 NERO, Linea, Atlantic
B Artificial Leather: Artificial Leathers B

Scan for all
colors & materials & catalogs