:koleksiyon



Designed by
Koray Malhan

Mudita

MUDITA S0 WSA2_H140_D OTR

Mudita is an innovative divider panel system meticulously crafted to provide a perfect balance of style and functionality. Tailored to meet your unique needs, this lightweight and versatile design offers four customizable heights and a variety of panel attachments.

Warranty / Cleaning & Maintenance

The warranty period is five years from the date of delivery. Check the QR code below, to see cleaning & maintenance information.

Production Time / Assembly Notes

6-8 weeks + Shipping
The product is delivered disassembled.

Product Description

• This Mudita unit functions both as a space divider and a working station.
• The MDF-core panels are upholstered in selected fabrics, and the desks come in selected laminates with cable grommets. The shelves featured in are laminated MDF.
• The desks and shelves feature waxed chamfer edges.
• The upholstery on the panel can be ordered quilted or seamless.
• The seating section features a steel frame interior structure sofa upholstered in selected fabrics.
• Thearmrest features two electrical units and two USB ports.

Dimension

Volume	2.59 m3 91.47 cbft3
Package	25
Weight	0 kg 0 lbs

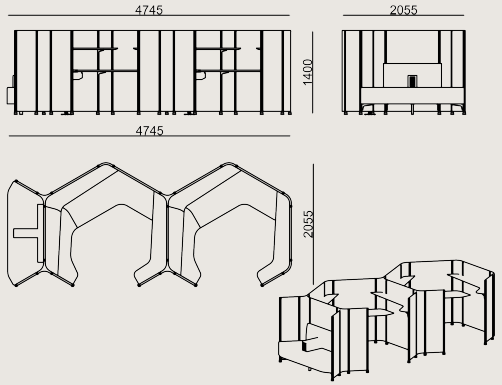

MUDITA S0 WSA2_H140_D OTR LMNT KUMAS C
Overall Width: 4745 mm / 186.81”
Overall Depth: 2055 mm / 80.91”
Overall Height: 1400 mm / 55.12”

COLORS & MATERIALS

Metal Finishes


METALLIC ANTHRACITE POWDER COATING

3101 WHITE POWDER COATING


METALLIC BROWN POWDER COATING

Laminate Finishes


D164 LUNA NTR


D142 GRANIT NTR

D218 KASMIR NTR

D264 BONY DÜZ


A662 REMBRANDT ART


A610 CABANA VNR

Fabric Finishes

C Fabric: Torino

Scan for all
colors & materials & catalogs